Decorative caps for Perfecto - Dark Chrome

IMO

12 801 970

Fits: IMO, LULU, MADISON, MEM, TARA, CL.1, LISSÉ, VAIA, META, CYO

- 1 pair

Including retaining screws availableunder order no. 12 800 970-FF

Dark Chrome	12 801 970-19
Chrome	12 801 970-00
Brushed Platinum	12 801 970-06
Platinum	12 801 970-08
Durabrass (23kt Gold)	12 801 970-09
Light Gold	12 801 970-26
Brushed Light Gold	12 801 970-27
Brushed Durabrass (23kt Gold)	12 801 970-28
Matte Black	12 801 970-33
Brushed Bronze	12 801 970-42
Brushed Champagne (22kt Gold)	12 801 970-46
Champagne (22kt Gold)	12 801 970-47
Brushed Chrome	12 801 970-93
Brushed Dark Platinum	12 801 970-99

We reserve the right to change designs, product range and technical specifications without prior notice.
More information can be found at: www.dornbracht.com +49 (0) 2371 8899 900 mail@dornbracht.com

Decorative caps for Perfecto - Dark Chrome

12 801 970

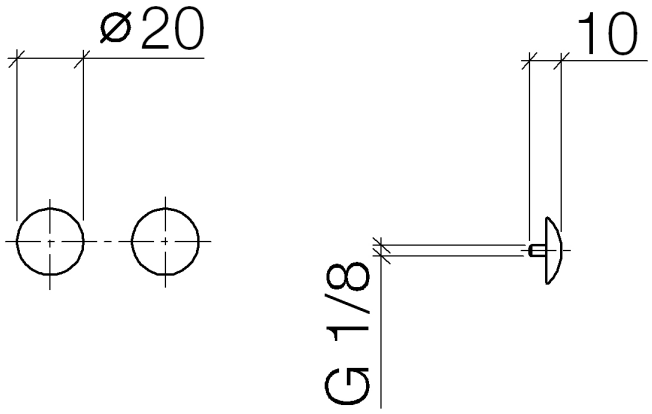

Decorative caps for Perfecto - Dark Chrome

IMO

12 801 970

Parts for other
finishes can be found
here: Chrome